3500/72M Recip Rod Position Monitor

Datasheet

Cordant™

146478 Rev. L

Description

The four-channel Bently Nevada™ 3500/72M Recip Rod Position Monitor accepts input from proximity transducers, conditions the signal to provide dynamic and static position measurements, and compares the conditioned signals with user-programmable alarms.

Each channel, depending on how you configure it, typically conditions its input signal to generate various parameters called measured values.

Use the 3500 Rack Configuration Software to:

- Configure alert setpoints for each active measured value and danger setpoints for any two of the active measured values.
- Protect reciprocating compressors by continuously comparing monitored parameters against configured alarm setpoints to display alarms and trigger relays, if needed.
- Monitor the condition of essential reciprocating compressor machinery.

> The monitor channels are programmed in pairs and can perform up to two functions at a time. For example, channels 1 and 2 can perform one function while channels 3 and 4 perform another or the same function.

The 3500/72M Recip Rod Position Monitor meets API 618 requirements for reciprocating compressors. It measures:

- Rod position
- Rod drop
- Hyper-compressor

Baker Hughes

Specifications

Inputs

Signal	Accepts from 1 to 4 proximity probe signals
Input Impedance	10 kΩ
Nominal Scale Factor	
Rod Position	0.79 mV/µm (20 mV/mil), 3.94 mV/µm (100 mV/mil), or 7.87 mV/µm (200 mV/mil)
Rod Position 2	3.94 mV/µm (100 mV/mil), or 7.87 mV/µm (200 mV/mil)
Rod Drop	3.94 mV/µm (100 mV/mil), or 7.87 mV/µm (200 mV/mil)
Hyper Compressor	3.94 mV/µm (100 mV/mil), or 7.87 mV/µm (200 mV/mil)
Power Consumption	7.7 watts, nominal

Outputs

Front Panel LEDs	
OK LED	Indicates when the Recip Rod Position Monitor is operating properly.
TX/RX LED	Indicates when the Recip Rod Position Monitor is communicating with other modules in the 3500 rack.
Bypass LED	Indicates when the Recip Rod Position Monitor is in Bypass Mode.
Front Buffered Outputs	
Buffered Transducer Outputs	The front of each monitor has one coaxial connector for each channel. Each connector is short-circuit protected.
Output Impedance	510 Ω
Transducer Power Supply	-24 Vdc

Data Values

The 3500/72M Recip Rod Position Monitor returns the following data values from measurements used to monitor the machine:

Rod Position Single Channel	Position Magnitude, Position Angle, Crank Angle, Pk-Pk Amplitude, Gap, 1X Amplitude, Not 1X Amplitude, 2X Amplitude
Rod Position Single 2 Channel	Pk-Pk Amplitude Position Magnitude Position Angle Crank Angle Gap Average Piston Position Instantaneous Piston Position Instantaneous Probe Gap
Rod Position Pair Channel	Position Magnitude, Position Angle, Crank Angle, Pk-Pk Amplitude, Gap, 1X Amplitude, Not 1X Amplitude, 2X Amplitude
Rod Position Pair 2 Channel	Pk-Pk Amplitude Position Magnitude Position Angle Crank Angle Gap Average Piston Position Instantaneous Piston Position Instantaneous Probe Gap
Rod Drop Channel	Average Piston Position, Average Probe Gap, Instantaneous Piston Position, Instantaneous Probe Gap
Hyper Channel	Pk-Pk Displacement, Gap, 1X Amplitude, Not 1X Amplitude, 2X Amplitude

Baker Hughes

Signal Conditioning

Specified at +25°C (+77°F) unless otherwise noted.

Rod Position 2 (Single and Pair) Channels

Frequency Response	
Peak-Peak filter	Fixed 1 Hz to 600 Hz
Gap filter	-3 dB at 0.09 Hz
Average piston position	Fixed 1 Hz to 600 Hz
Accuracy	
Peak-Peak Amplitude	Within ±0.33% of full-scale typical ±1% maximum
Position magnitude	Within ±0.33% of full-scale typical ±1% maximum
Rod Position Angle (paired only)	Within ±1° typical ±3° maximum
Position Crank Angle	Within ±1° typical ±3° maximum
Gap	Within ±0.33% of full-scale typical ±1% maximum
Average piston position	Within ±0.33% of full-scale typical ±1% maximum
Instantaneous piston position	Within ±0.33% of full-scale typical ±1% maximum
Instantaneous piston gap	Within ±0.33% of full-scale typical ±1% maximum

Rod Position Single and Pair Channels

Frequency Response	
Peak-Peak filter	Fixed 1 Hz to 600 Hz
Gap filter	-3 dB at 0.09 Hz
Not 1X filter	Constant Q Notch filter Minimum rejection in stop-band of 34.9 dB over frequency range of 60 cpm to 15.8 times running speed
1X and 2X vector filter	Constant Q Filter Minimum rejection in stopband of 57.7 dB

1X and 2X Vector and Not 1X parameters are valid for machine speeds of 60 cpm to 2130 cpm.

Accuracy	
Position magnitude (direct)	Within ±0.33% of full-scale typical ±1% maximum
Gap	Within ±0.33% of full-scale typical ±1% maximum
1X Amplitude	Within ±0.33% of full-scale typical ±1% maximum
2X Amplitude	Within ±0.33% of full-scale typical ±1% maximum
Pk-Pk Amplitude	Within ±0.33% of full-scale typical ±1% maximum
Not 1X Amplitude	Within ±3.0% of full scale typical
Position Crank Angle	Within ±1° typical ±3° maximum

Accuracy	
Rod Position Angle (paired only)	Within ±1° typical ±3° maximum

Rod Drop Channels

Frequency Response	
Average piston position (direct)	Fixed 1 Hz to 600 Hz
Average Gap	-3 dB at 0.09 Hz
Accuracy	
Average piston position (direct)	Within ±0.33% of full-scale typical ±1% maximum
Average Gap	Within ±0.33% of full-scale typical ±1% maximum
Instantaneous piston position	Within ±0.33% of full-scale typical ±1% maximum
Instantaneous probe Gap	Within ±0.33% of full-scale typical ±1% maximum

Hyper Channels

Frequency Response	
Peak-Peak filter	Fixed 1 Hz to 600 Hz
Gap filter	-3 dB at 0.09 Hz
Not 1X filter	Constant Q Notch filter Minimum rejection in stop-band of 34.9 dB over frequency range of 60 cpm to 15.8 times running speed

Frequency Response	
1X Vector filter	Constant Q filter Minimum rejection in stop-band of 57.7 dB
2X Vector filter	Constant Q filter Minimum rejection in stop-band of 57.7 dB

1X and 2X Vector and Not 1X parameters are valid for machine speeds of 60 cpm to 2130 cpm.

Accuracy	
Peak-Peak magnitude	Within ±0.33% of full-scale typical ±1% maximum
Gap	Within ±0.33% of full-scale typical ±1% maximum
1X Amplitude	Within ±0.33% of full-scale typical ±1% maximum
2X Amplitude	Within ±0.33% of full-scale typical ±1% maximum
Not 1X Amplitude	Within ±0.33% of full-scale typical

Physical

Monitor Module (Main Board)	
Dimensions (Height x Width x Depth)	241.3 mm x 24.4 mm x 241.8 mm (9.50 in x 0.96 in x 9.52 in)
Weight	0.91 kg (2.0 lb)
I/O Modules (non-barrier)	
Dimensions (Height x Width x Depth)	241.3 mm x 24.4 mm x 99.1 mm (9.50 in x 0.96 in x 3.90 in)
Weight	0.20 kg (0.44 lb)
I/O Modules (barrier)	
Dimensions (Height x Width x Depth)	241.3 mm x 24.4 mm x 163.1 mm (9.50 in x 0.96 in x 6.42 in)
Weight	0.46 kg (1.01 lb)

Rack Space Requirements

Monitor	1 full-height front slot
I/O Modules	1 full-height rear slot

Environmental Limits

Operating Temperature	When used with Internal / External Termination Proximitor / Seismic I/O Module: -30°C to +65°C (-22°F to +149°F) When used with Proximitor / Seismic Internal Barrier I/O Module (Internal Termination) 0°C to +65°C (32°F to +149°F)
Storage Temperature	-40°C to +85°C (-40°F to +185°F)
Humidity	95% Non-condensing

Alarms

Alarm Setpoints	Use Rack Configuration Software to set alert levels for each value measured by the monitor and danger setpoints for any two of the values measured by the monitor. Alarms are adjustable from 0 to 100% of full-scale for each measured value. However, when the full-scale range exceeds the range of the transducer, the range of the transducer will limit the setpoint.
Accuracy of alarm setpoints	Within 0.13% of the desired value

Alarm Time Delays

You can program alarm delays using 3500 Rack Configuration Software.

Alert	From one to 60 seconds in one second intervals
Danger	0.1 seconds (nominal) or from one to 60 seconds in one second intervals
Timed OK Channel Defeat	OK Channel defeat is disabled for all Rod Position and Rod Drop configurations. As a hyper-compressor monitor, when both transducers are NOT OK, the monitor issues a Danger alarm immediately.

Compliance and Certifications

FCC

This device complies with part 15 of the FCC Rules. Operation is subject to the following two conditions:

- This device may not cause harmful interference.
- This device must accept any interference received, including interference that may cause undesired operation.

EMC

European Community Directive:

EMC Directive 2014/30/EU

Standards:

EN 61000-6-2; Immunity for Industrial Environments
EN 61000-6-4; Emissions for Industrial Environments

Electrical Safety

European Community Directive:

LV Directive 2014/35/EU

Standards:

EN 61010-1

RoHS

European Community Directive:

RoHS Directive 2011/65/EU

Maritime

DNV GL rules for classification – Ships, offshore units, and high speed and light craft

ABS Rules for Condition of Classification, Part 1

- Steel Vessels Rules
- Offshore Units and Structures

Hazardous Area Approvals

For the detailed listing of country and product-specific approvals, refer to the *Approvals Quick Reference Guide (108M1756)*.

For additional technical documentation, please log in to bntechsupport.com and access the Bently Nevada Media Library.

cNRTLus

When used with I/O module ordering options without internal barriers	Class I, Zone 2: AEx/Ex nA nC ic IIC T4 Gc; Class I, Zone 2: AEx/Ex ec nC ic IIC T4 Gc; Class I, Division 2, Groups A, B, C, and D; T4 @ Ta= -20˚C to +65˚C (-4˚F to +149˚F) When installed per drawing 149243 or 149244.
When used with I/O module ordering options with internal barriers	Class I, Zone 2: AEx/Ex nA nC ic [ia Ga] IIC T4 Gc; Class I, Zone 2: AEx/Ex ec nC ic [ia Ga] IIC T4 Gc; Class I, Division 2, Groups A, B, C, and D (W/ IS Output for Division 1) T4 @ Ta= -20˚C to +65˚C (-4˚F to +149˚F) When installed per drawing 138547.

ATEX/IECEx

When used with I/O module ordering options without internal barriers	II 3 G Ex nA nC ic IIC T4 Gc; Ex ec nC ic IIC T4 Gc; T4 @ Ta= -20˚C to +65˚C (-4˚F to +149˚F) When installed per drawing 149243 or 149244.
When used with I/O module ordering options with internal barriers	II 3(1) G Ex nA nC ic [ia Ga] IIC T4 Gc; Ex ec nC ic [ia Ga] IIC T4 Gc; T4 @ Ta= -20˚C to +65˚C (-4˚F to +149˚F) When installed per drawing 138547.

Ordering Considerations

- For I/O Modules with External Terminations, order the External Termination Blocks and cable separately for each I/O Module.
- For Internal Barriers, refer to the *3500 Internal Barrier Datasheet* (document 141495).
- The Recip Rod Position Monitor requires version 3.20 or higher of the 3500 Rack Configuration Software.
- Rod Position Single 2 and Rod Position Pair 2 channel types require Rack Config release 6.0 or later.

The lower limit for machine speed is 60 RPM in the standard product. For machine speeds down to 30 RPM, modification 135M8199-01 is required.

Ordering Information

For the detailed listing of country and product-specific approvals, refer to the *Approvals Quick Reference Guide (108M1756)*.

For additional technical documentation, please log in to bntechsupport.com and access the Bently Nevada Media Library.

Rod Position Monitor 3500/72M - AA-BB

A: I/O Module Type	
01	I/O Module with Internal Terminations
02	I/O Module with External Terminations
03	I/O Module with Internal Barriers and Internal Terminations
B: Hazardous Area Approval Option	
00	None
01	cNRTLus (Class 1, Division 2)
02	ATEX/IECEx/CSA (Class 1, Zone 2)

External Termination Blocks

Part Number	Description
125808-08	Proximitor / Velomitor External Termination Block Euro Style connectors
128015-08	Proximitor / Velomitor External Termination Block Terminal Strip Connectors
128702-01	Recorder External Termination Block Euro Style Connectors
128710-01	Recorder External Termination Block Terminal Strip Connectors

Cables

3500 Transducer (XDCR) to External Termination (ET) Block Cable 129525 - AAAA-BB

A: I/O Cable Length	
0005	5 feet (1.5 metres)
0007	7 feet (2.1 metres)
0010	10 feet (3.0 metres)
0025	25 feet (7.6 metres)
0050	50 feet (15.2 metres)
0100	100 feet (30.5 metres)
B: Assembly Instructions	
01	Not Assembled
02	Assembled

3500 Recorder Output to External Termination (ET) Block Cable 129529 - AAAA-BB

A: I/O Cable Length	
0005	5 feet (1.5 metres)
0007	7 feet (2.1 metres)
0010	10 feet (3.0 metres)
0025	25 feet (7.6 metres)
0050	50 feet (15.2 metres)
0100	100 feet (30.5 metres)
B: Assembly Instructions	
01	Not Assembled
02	Assembled

Spares

Part Number	Description
176449-08	3500/72M Recip Rod Position Monitor
140471-01	I/O Module with Internal Terminations
00580434	Internal I/O Module connector header Euro Style, 8-pin, green Used with I/O modules 140471-01
140482-01	I/O Module with External Terminations
135489-01	I/O Module with Internal Barriers and Internal Terminations
00580441	Internal I/O Module connector header Euro Style, 3-pin, green Used with I/O modules 135489-01 and 140471-01
00502133	Internal I/O Module connector header Euro Style, 12 pin, blue Used with I/O modules 135489-01
146479-01	3500/72M Recip Rod Position Monitor User Manual
166M4363	Connector header Push-in-spring type (Alternative for PN 00580441)
166M2389	Connector header Push-in-spring type (Alternative for PN 00580434)
166M2388	Connector header Push-in-spring type (Alternative for PN 00580432)

Graphs and Figures

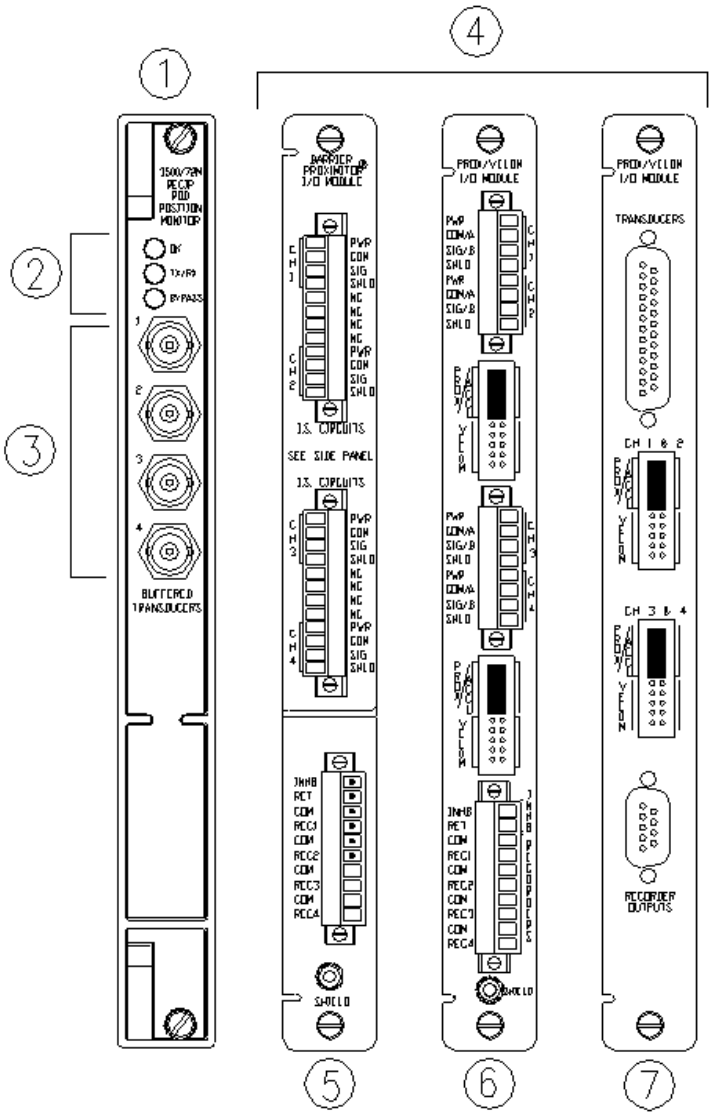

1. 3500/72M Front View
2. Status LEDs
3. Buffered Transducer Outputs
4. I/O Modules Rear Views
5. Barrier I/O Module, Internal Termination
6. I/O Module, Internal Termination
7. I/O Module, External Termination

Figure 1: Legacy Front and Rear Views of 3500/72M Recip Rod Position Monitor

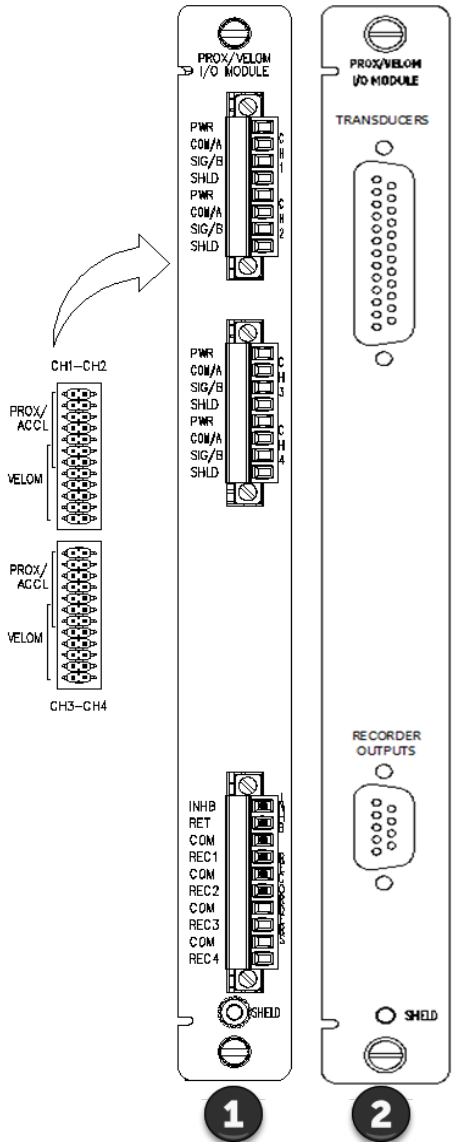

The I/O modules with internal or external terminations have the same jumpers.

Figure 2: Updated Rear View of 3500/72M I/O Modules

Copyright 2025 Baker Hughes Company. All rights reserved.

Bently Nevada, a Baker Hughes Company

1631 Bently Parkway South, Minden, Nevada USA 89423

https://bntechsupport.com